Specifications:

1. General tolerance unless noted is ± 0.5mm
2. Hole to Hole: 71.5mm
3. Holes dia.: ∅4.6mm ± 0.2mm
4. Outer ring dia.: ∅76.5mm
5. Ring dia.: ∅1.8mm ± 0.1mm
6. Rib dia.: ∅1.8mm ± 0.1mm
7. Height: 5.5mm
8. Stagger welds: 5 rings

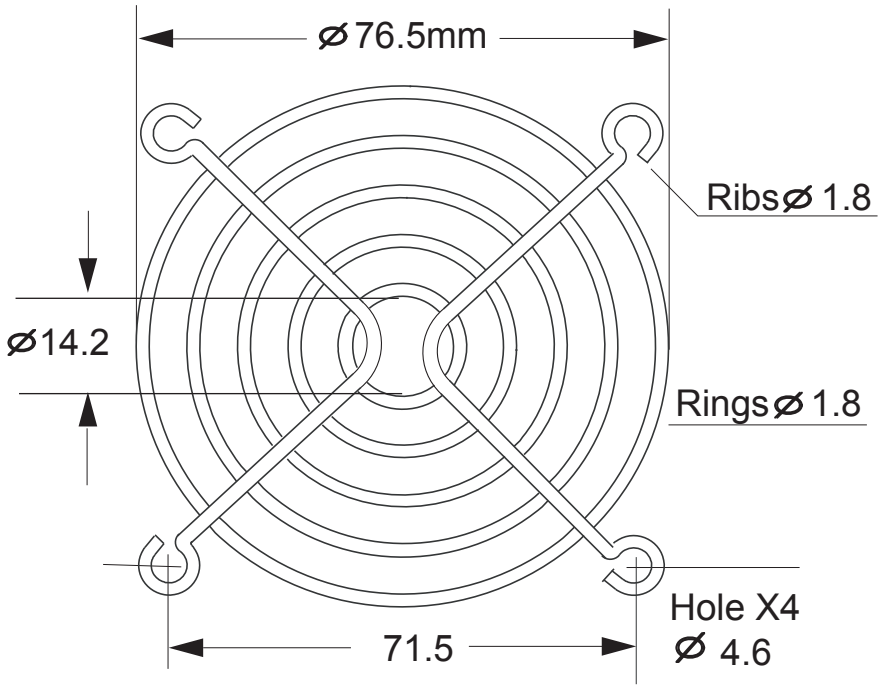

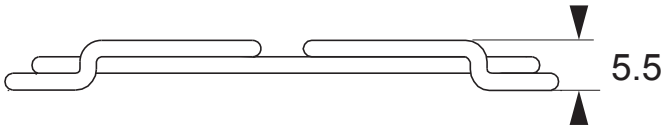

Material:

- Rings & Ribs Steel wire BL1-195(C1008)
- Surface Treating
  Nickled-chrome electro plating surface, bright color
  (Black color & other platings are available on request)
- Comply with the limits as set by RoHS / SVHC

- Weld Joins Contact Strength
  Spot welding Points to withstand min. 88lbs(40Kgs.)
- Weight: 19.0Gm

Model No:

EMG80-18

(Wire Form, Metal Fan Guard For 80mm (3.15") Fans)

Tel: +886-2-8797-5009 *Fax: +886-2-8797-5228* *www.eagroup.com.tw* *Email: jeffrey@eagroup.com.tw*